Generic Lifepo4, 6v Lead Carbon Cell Monitor and Balancer

Ver 2.003 RM Software, Wellington

Lead Carbon Bank has 8 series x 6v for 50v rail.
16 cells used on Lifepo4 bank.
Not shown: All Cell+- sense wires fused at each battery sample point.
Balance load = 3.5 amps per cell.

Last Change:
12 Jan 2019, initial design.
18 Jan 2019, Cell Calibration Added
25 Jan 2019, Combined serial read and load shift registers, common data lines
23 July 2019, added I2c IO ports
15 Jan 2010, Interlock simplified, mosfet removed, mosfet array used for relay switching

Modular Cell Monitors and Balance Loads

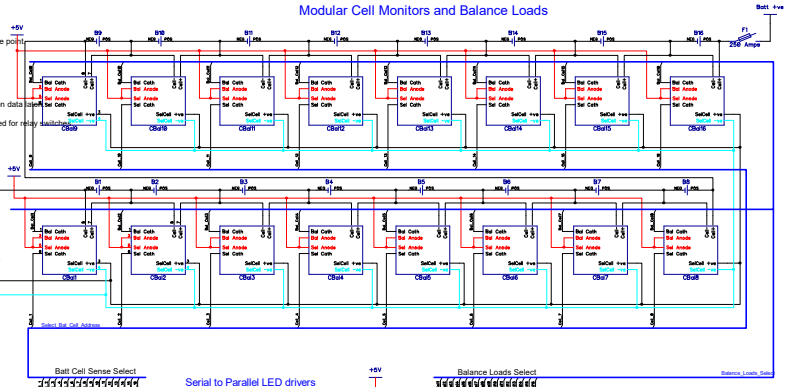

5 and 12v rails isolated from main bank
cell sense wires connect direct to any selected cell via 1k resistors.
1/2 battery voltage selected by 0.1% divider resistors

Temperature Sensor Modules External

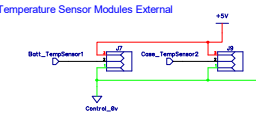

1-Wire network adapter Module

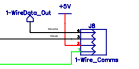

Note: Adapter has Opto Isolated IO

Serial to Parallel LED drivers

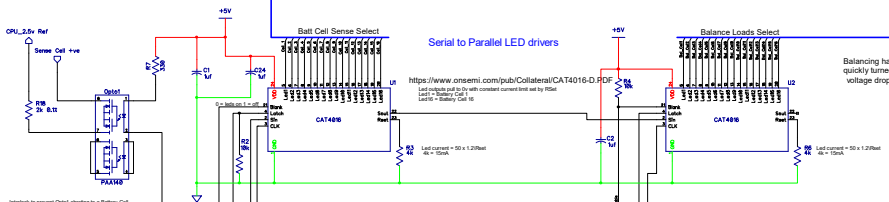

https://www.onsemi.com/pub/Collateral/CAT4016-D.PDF

Balancing has seperate Enable input so any balance loads can be quickly turned off whenever a call voltage read is required, stops voltage drops on the balance cables affecting the cell value

Interlock to prevent Opto1 shorting to a Battery Cell
Output 0 (on) only when Cal = 1 and Read = 1

CPU IO

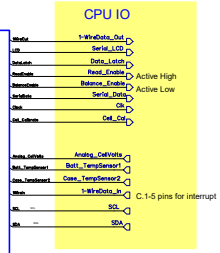

Selected Cell Isolation Amp

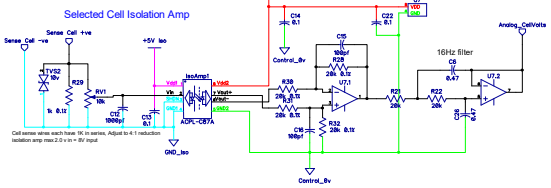

Cell sense wires each have 1K in series, Adjust to 4:1 reduction
isolation amp max 2.0 v in = 8V input

Isolated DC Power to Isolation Amp

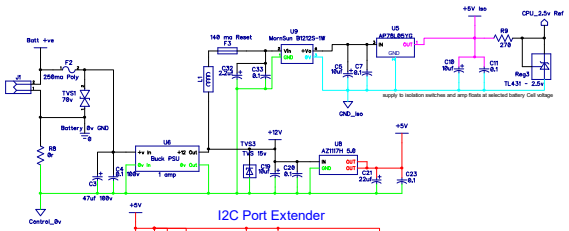

I2C Port Extender

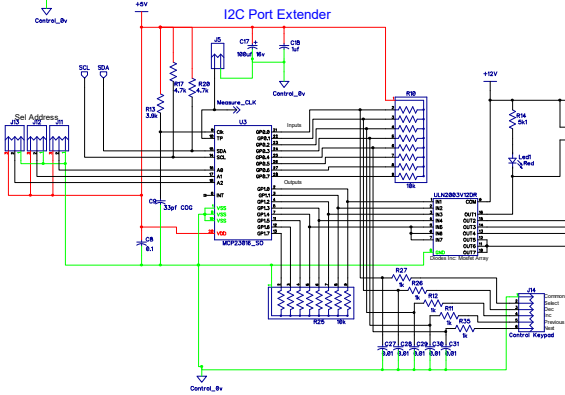
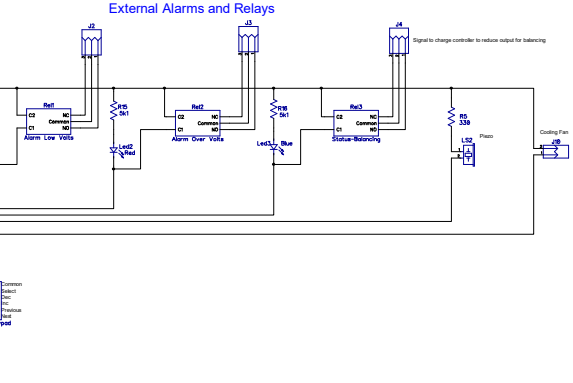
External Alarms and Relays